LEDS C4

05-E051

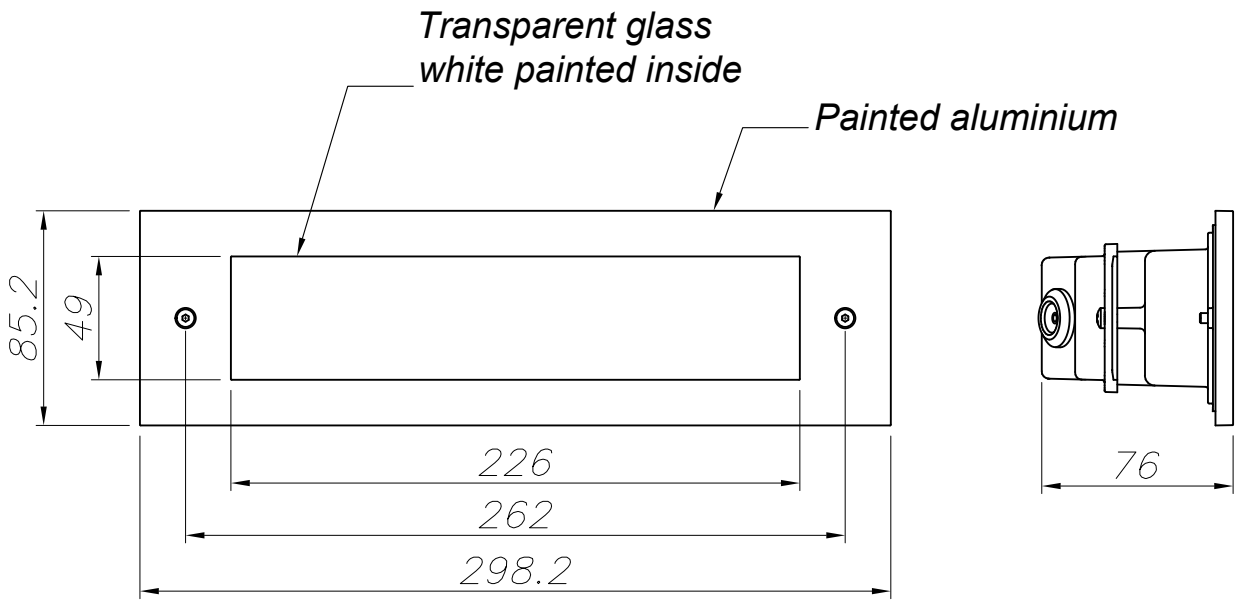


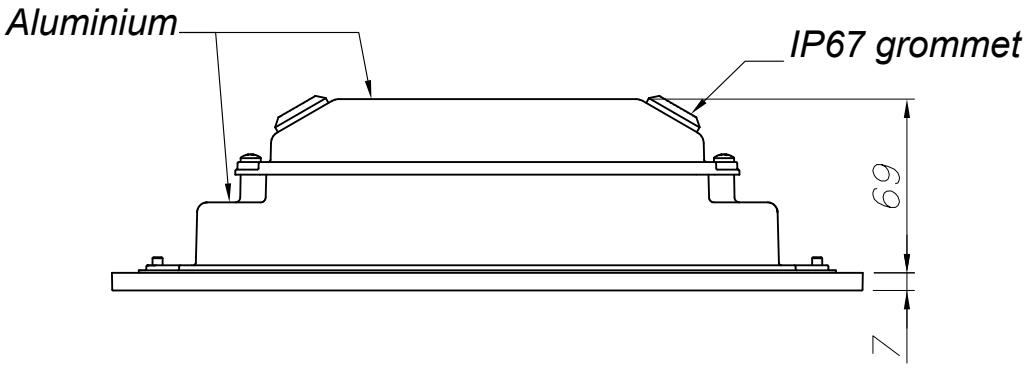


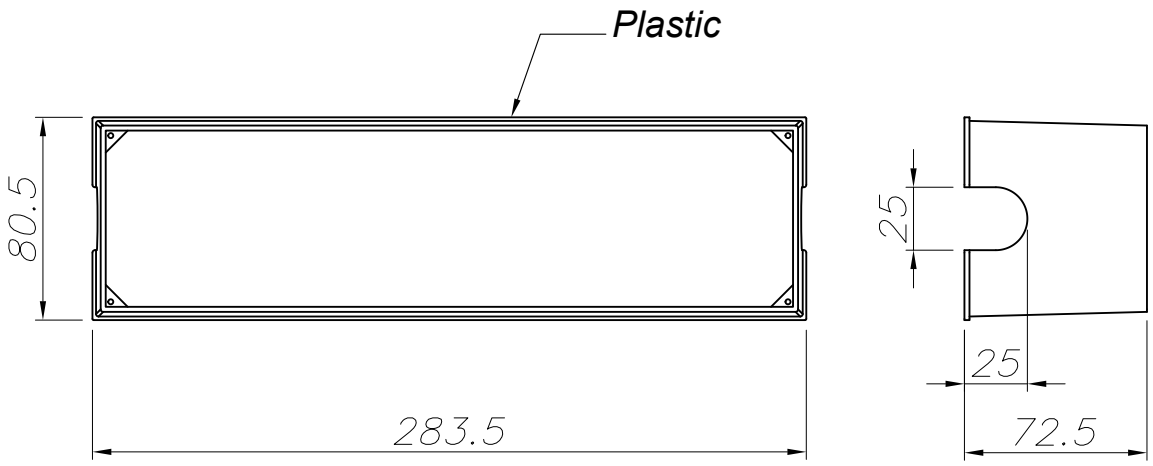


23-08-2018